Check for updates

Received: 27 October 2023 | Revised: 29 December 2023 | Accepted: 25 January 2024

DOI: 10.1111/sms.14578

ORIGINAL ARTICLE

WILEY

Effects of anthropometrics, thrust, and drag on stroke kinematics and 100 m performance of young swimmers using path-analysis modeling

Jorge E. Morais[1,2] | **Tiago M. Barbosa**[1,2] | **Natalia A. Gomeñuka**[3] | **Daniel A. Marinho**[4,5]

[1]Department of Sport Sciences, Instituto Politécnico de Bragança, Bragança, Portugal

[2]Research Centre for Active Living and Wellbeing (LiveWell), Instituto Politécnico de Bragança, Bragança, Portugal

[3]Research Department of the Faculty of Health Sciences, Universidad Católica de las Misiones (UCAMI), Posadas, Argentina

[4]Department of Sport Sciences University of Beira Interior, Covilhã, Portugal

[5]Research Centre in Sports, Health and Human Development (CIDESD), Covilhã, Portugal

Correspondence
Jorge E. Morais, Department of Sport Sciences, Instituto Politécnico de Bragança, Campus Sta. Apolónia, Apartado 1101, 5301-856, Bragança, Portugal.
Email: morais.jorgestrela@ipb.pt

Funding information
Fundação para a Ciência e a Tecnologia

Abstract

The aim of this study was to understand the interactions between anthropometric, kinetic, and kinematic variables and how they determine the 100 m freestyle performance in young swimmers. Twenty-five adolescent swimmers (15 male and 10 female, aged 15.75 ± 1.01 years) who regularly participated in regional and national competitions were recruited. The 100 m freestyle performance was chosen as the variable to be predicted. A series of anthropometric (hand surface area–HSA), kinetic (thrust and active drag coefficient (C_{DA})), and kinematic (stroke length (SL); stroke frequency (SF), and swimming speed) variables were measured. Structural equation modeling (via path analysis) was used to develop and test the model. The initial model predicted performance with 90.1% accuracy. All paths were significant ($p < 0.05$) except the thrust—SL. After deleting this non-significant path (thrust—SL) and recalculating, the model goodness-of-fit improved and all paths were significant ($p < 0.05$). The predicted performance was 90.2%. Anthropometrics had significant effects on kinetics, which had significant effects on kinematics, and consequently on the 100 m freestyle performance. The cascade of interactions based on this path-flow model allowed for a meaningful prediction of the 100 m freestyle performance. Based on these results, coaches and swimmers should be aware that the swimming predictors can first meaningfully interact with each other to ultimately predict the 100 m freestyle performance.

KEYWORDS

biomechanics, deterministic models, modeling, performance, swimming

1 | INTRODUCTION

Swimming is a time-based sport in which swimmers must cover a given distance in the shortest amount of time to achieve better performances, that is fastest speeds. Of all the swimming distances and strokes, the front-crawl stroke (i.e., freestyle event) in the sprint events (i.e., 50 and 100 m distances) is the one that has received the most

This is an open access article under the terms of the Creative Commons Attribution License, which permits use, distribution and reproduction in any medium, provided the original work is properly cited.
© 2024 The Authors. *Scandinavian Journal of Medicine & Science In Sports* published by John Wiley & Sons Ltd.

attention from researchers and coaches.[1,2] This is because it is the fastest stroke[3] and the one that swimmers have participated in since early childhood.[4]

Research on swimming performance indicates that performance is strongly dependent on the interaction of anthropometric, biomechanical (including hydrodynamics, kinematics, kinetics, motor control, etc.) and energetic/efficiency factors.[5,6] Nevertheless, it has been suggested that variables related to swimming technique (i.e., biomechanics) are the ones that strongly influence performance, especially in young swimmers.[7] Overall, the main idea to retain is that larger body features lead to faster/better stroke kinematics and consequently to better performance.[8] According to the literature, the best swimmers are taller, have a wider arm span, larger hands and feet, a faster cadence (stroke frequency (SF)) and a longer stroke length (SL) than their slower counterparts.[9] In the context of youth swimming, understanding the relationship between all of these anthropometric and technical characteristics will provide coaches with deeper insights into how to improve their swimmers' performance. In fact, it has been shown that swimming performance is a holistic phenomenon strongly dependent on the interaction of several variables and not on isolated characteristics.[10] Thus, increasing the knowledge of such interactions at different ages may help coaches to design more appropriate training programs and drills. This will help swimmers to consolidate their stroke mechanics more quickly, allowing them to spend more time on the physiological aspects of sprint swimming.

In addition to the variables related to anthropometrics and stroke kinematics, the hydrodynamics of swimmers is also a scientific field that is being studied by researchers.[11] The specific characteristics of the aquatic environment, which do not allow for "fluid" displacement as it happens on land, increase the interest and focus of researchers. Swimming speed is characterized by a periodically accelerated/decelerated displacement based on the net balance of thrust and drag.[10] Therefore, swimmers who tend to provide more thrust and less drag are more likely to perform better.[12,13] While drag and its effects on swimming performance have been extensively studied in young swimmers,[11] there is less information on the effects of thrust on swimming performance using experimental methods. However, studies report that generating more thrust leads to better swimming performance.[14,15]

Deterministic modeling is a modeling paradigm that determines the relationships between a movement outcome measure and the biomechanical factors that produce such a measure.[16] Based on deterministic models related to swimming, it has been shown that thrust and drag (kinetics) have a direct effect on the swimmers' stroke kinematics and consequently on the swimmers' performance.[17] Structural equation modeling (SEM) is a confirmatory statistical analysis that quantifies the relationships among observed variables with the goal of providing a quantitative measure of the theoretical model hypothesized by researchers.[8] Specifically, path-flow analysis allows researchers to design theoretical models based on exploratory research and understand the direct and indirect effects that predictor variables may have on a given variable. Instead of understanding only the direct effect of one set of variables on another, it is possible to understand all the mediating effects between all the variables. In addition, and to the best of our knowledge, there are no studies that have simultaneously reported the effects of thrust and drag on swimming kinematics or performance with the goal of predicting the latter. That is, researchers tend to understand the effects of thrust on swimmers' performance simultaneously with other variables, but not with drag.[14,18]

Therefore, the aim of this study was to understand the interactions between anthropometric, kinetic, and kinematic variables and how they determine the 100 m freestyle event in young swimmers. A deterministic model based on path-flow analysis was developed. It was hypothesized that all paths designed would be significant and that the 100 m freestyle event would be meaningfully predicted by the interactions of the remaining variables.

2 | METHODS

2.1 | Participants

An a priori power analysis was performed using G*Power.[19] Twenty participants were required to detect a large effect size ($f^2 = 0.35$) with 80% power ($\alpha = 0.05$, one-tailed test) for a "linear multiple regression: fixed model, single regression coefficient" statistical test. A large effect size was used to estimate the sample size because exploratory studies revealed strong relationships between swimming performance and anthropometrics, kinematics, and hydrodynamics in young swimmers.[18,20] Twenty-five adolescent swimmers (15 male: age = 15.99 ± 0.82 years, body mass = 70.17 ± 7.64 kg, height = 1.78 ± 0.06 m; arm span = 1.84 ± 0.09 m; maturity offset = 2.27 ± 0.64 years, FINA points in the 100 m freestyle event in the short-course swimming pool = 581.40 ± 54.43 points; 10 female: age = 15.37 ± 1.19 years, body mass = 58.35 ± 6.18 kg, height = 1.64 ± 0.07 m; arm span = 1.68 ± 0.08 m; maturity offset = 2.98 ± 1.22 years, FINA points in the 100 m freestyle event in the short-course swimming pool = 616.60 ± 83.96 points) who regular compete in regional and national events were recruited. The sample included age-group national record holders and other swimmers in a national talent identification program. Some of the swimmers also

16000838, 2024, 2, Downloaded from https://onlinelibrary.wiley.com/doi/10.1111/sms.14578 by Czech Technical University in Prague, Wiley Online Library on [02/03/2026]. See the Terms and Conditions (https://onlinelibrary.wiley.com/terms-and-conditions) on Wiley Online Library for rules of use; OA articles are governed by the applicable Creative Commons License

regularly competed in international events (Tier 3 athletes).[21] Coaches and/or parents and the swimmers gave their consent/assent to participate in this study. All procedures were in accordance with the Helsinki Declaration regarding human research. The Polytechnic Ethic Committee also approved the study design (No. 72/2022).

2.2 | Theoretical model

The theoretical model (Figure 1A) was designed in tandem with the state of the art of exploratory research in competitive swimming.[22] C_{DA} (kinetics) is considered the best indicator of a swimmer's hydrodynamic profile and is less dependent on swimming speed than drag.[23] Smaller C_{DA} is associated with a faster swimming speed, and it is also associated with the ability of swimmers to achieve greater distance per stroke cycle (i.e., SL). The HSA (anthropometrics) is strongly and positively associated with greater thrust (kinetics).[24] More thrust can have a positive and significant effect on the swimmers' stroke kinematics, namely SF and SL, and these on swimming speed.[25,26] Finally, the 100 m freestyle event is highly dependent on swimming speed during the so-called "clean swim", that is without the interference of the start and turns. Thus, the present model was designed to test a cascade of effects between several determinants to understand the performance of young swimmers in a sprint event (100 m freestyle).

2.3 | Research design

Prior to data collection, the swimmers performed a sprint specific warm-up session.[27] After an auditory signal, each swimmer performed three maximal 25 m trials in front-crawl with a wall push-off start. Swimmers had a 30 min rest between trials to allow for full recovery. The best trial (fastest swimming speed) was used for further analysis. Swimmers were instructed to perform non-breathing stroke cycles during the data collection period to avoid changes in stroke coordination or technique that could negatively affect swimming speed.[28] Three stroke cycles were measured between the 11th and 24th meter and the average was used for further analysis.

2.4 | Kinematics

Swimming speed (v, in m/s), stroke frequency (SF, in Hz), and stroke length (SL, in m) were selected as kinematic variables. The string of a speedometer (SpeedRT, ApLab, Rome, Italy) was attached to the waist of the swimmers. The speedometer calculated the displacement and speed of the swimmers at a rate of 100 Hz. The speed-time series were then imported into a signal processing software (AcqKnowledge v. 3.9.0, Biopac Systems, Santa Barbara, USA). After residual analysis, the signal was handled with a fourth order Butterworth low-pass filter (cut-off: 5 Hz). A video camera (GoPro Hero Black 7, USA) was placed in a fixed position in the mid-section of the swimming pool. It was synchronized with the speedometer to record the swimmers in the sagittal plane and to identify the head passage in the 11th and 24th meter marks and to calculate the swimmers' SF based on the hand entry. Swimming speed was obtained from the software between the established marks. The SF was calculated by the number of cycles per unit of time from the time taken to complete a full cycle ($f = 1/P$; where P is the period) and then converted to Hz. The SL was calculated as $SL = v/SF$ in which SL is the stroke length (in m), v is the swimming speed (in m/s), and SF is the stroke frequency (in Hz).[29]

2.5 | Thrust

Thrust was measured simultaneously with kinematics over the same distance (11th–24th meter marks). A pressure sensor system (Swimming Technology Research, USA) was used to measure thrust ($f = 100$ Hz).[30] This system is based on sensors that estimate in-water pressure, with a measurement error of 0.2%. Such sensors were placed between the third and fourth metacarpals to measure the pressure differential between the palmar and dorsal surfaces. It is believed that this location is a good proxy for the point of application of the thrust vector to the hand.[31] At the beginning of each trial, swimmers were asked to hold their hands immersed at the waist for 10 s to calibrate the system.[30] The sensors were fed through an A/D converter to a laptop running the Aquanex software (Aquanex v. 4.2 C1211, Richmond, USA).[32] The force-time series were then imported into a signal processing software (AcqKnowledge v. 3.9.0, Biopac Systems, Santa Barbara, USA). The signal was handled with a fourth order Butterworth low-pass filter (cut-off: 5 Hz). For each arm-pull (right and left), the mean thrust was analyzed. Then, the F_{total} (the sum of the average thrust obtained by the two upper limbs, in N) was calculated.

2.6 | Active drag coefficient

The velocity perturbation method was used to calculate the coefficient of active drag (C_{DA}).[33] Two 25 m maximum front-crawl trials with a push-off start were performed. One trial was performed at maximum front-crawl (swimming "freely") and the other was performed towing a

16000838, 2024, 2, Downloaded from https://onlinelibrary.wiley.com/doi/10.1111/sms.14578 by Czech Technical University in Prague, Wiley Online Library on [02/03/2026]. See the Terms and Conditions (https://onlinelibrary.wiley.com/terms-and-conditions) on Wiley Online Library for rules of use; OA articles are governed by the applicable Creative Commons License

hydrodynamic body (i.e., a perturbation device—see work of Kolmogorov's[34] for more information on this hydrodynamic body). This hydrodynamic body was attached to the swimmers' waist with a belt at a distance of 8 m (to minimize the dragging effects of the disturbance device in the waist of the swimmer).[33] The swimming speed between the 11th and 24th meter marks in both trials is needed to further calculate the C_{DA}. The "free swim" trial was the one performed while the kinematic variables were being collected. Swimmers performed another trial with the perturbation device attached. The C_{DA} was calculated as:

$$C_{DA} = \frac{2\,D_A}{\rho\,\mathrm{FSA}\,v^2} \tag{1}$$

in which C_{DA} is the coefficient of active drag (dimensionless), D_A is the active drag (N), ρ is the density of the water (997 kg/m^3), FSA is the swimmer's frontal surface area (m^2), and v is the swimming speed (m/s). For the FSA measurement, the swimmers were photographed on land with a digital camera (Sony a6000, Tokyo, Japan) in the transverse plane near a 2D calibration that simulated the five key moments of the front-crawl stroke cycle: (i) right hand catch; (ii) right hand insweep; (iii) right hand exit and left hand catch; (iv) left hand insweep; and (v) left hand exit and right hand catch.[35] Then, each FSA position was measured by digital photogrammetry using specialized software (Udruler, AVPSoft, USA). The values at each position were interpolated using a cubic spline from which the FSA values at each percentage point (5% each) of the stroke were calculated. The average FSA (in m^2) of the five key moments was then used to calculate the C_{DA}. This was done because using the FSA as being the largest perimeter at chest height leads to an underestimation of the effective FSA during swimming.[35]

2.7 | Performance

The 100 m freestyle event in a short-course swimming pool (i.e., 25 m length) was selected as the performance outcome. The time between the event and data collection was no more than 15 days, as recommended by others.[8]

2.8 | Statistical analysis

Normality and homoscedasticity assumptions were analyzed using the Shapiro–Wilk and Levene tests, respectively. Descriptive statistics were calculated as mean ± one standard deviation. As there were no significant differences between the sexes in the correlations between the performance and the remaining independent variables, males and females were plotted together. Spearman correlation coefficients were calculated between the independent variable (i.e., 100 m freestyle performance) and the remaining variables, and all paths designed in the theoretical model ($p \leq 0.05$). As a qualitative index, the relationship was considered: (i) trivial, if $0 < r_s < 0.1$; (ii) small, if $0.1 \leq r_s < 0.3$; (iii) moderate, if $0.3 \leq r_s < 0.5$; (iv) large, if $0.5 \leq r_s < 0.7$; (v) very large, if $0.7 \leq r_s < 0.9$, and; (vi) near perfect, if $0.9 \leq r_s \leq 1.0$.[36] These statistical analyses were performed using the IBM SPSS statistics program (version 29.0; IBM Inc., Chicago, IL, USA).

Path-flow analysis was used to test the model.[8] The interpretation of this type of approach is based on the links between variables (i.e., the ability of one or more dependent variables to predict an independent variable). These relationships represent a beta value (i.e., standardized coefficients) that indicates the contribution of one variable to the other. Standardized regression coefficients (b) were considered, and the significance of each one was assessed using the Student's t-test ($p \leq 0.05$). The residual errors and coefficients of determination were also calculated (representing the variable predictive error and the variable predictive value, respectively). The quality of the goodness-of-fit of the model was measured by calculating the Chi-square/degrees of freedom ratio (x^2/df). This ratio was considered qualitatively as: $x^2/\mathrm{df} > 5$ poor adjustment; $5 \geq x^2/\mathrm{df} > 2$ reasonable adjustment; $2 \geq x^2/\mathrm{df} > 1$ good adjustment; $x^2/\mathrm{df} \sim 1$ very good adjustment.[37] The model was constructed using variables and paths that did not have multicollinearity effects to avoid biases in the regressions. The IBM SPSS Amos program (version 26.0; IBM Inc., Chicago, IL, USA) was used to perform the path-flow analysis.

3 | RESULTS

Table 1 presents the descriptive statistics (mean ± standard deviation) of the swimmers by gender and all pooled together. Table 2 presents the Spearman's correlation coefficient between all independent variables and the 100 m freestyle performance, as well as between the paths linked in the theoretical model. All independent variables showed a significant correlation with the 100 m freestyle performance ranging from a moderate effect size (C_{DA}: $r_s = 0.419$, $p = 0.037$) to a very large one (speed: $r_s = -0.826$, $p < 0.001$). As for the correlations between pathways, all of them showed significant correlations with moderate (HSA—thrust: $r_s = 0.456$, $p = 0.22$; C_{DA}—speed: $r_s = -0.395$, $p = 0.050$) to very large effect sizes (speed—100 m performance: $r_s = -0.826$, $p < 0.001$). The thrust—SL path was the only one that

16000838, 2024, 2, Downloaded from https://onlinelibrary.wiley.com/doi/10.1111/sms.14578 by Czech Technical University in Prague, Wiley Online Library on [02/03/2026]. See the Terms and Conditions (https://onlinelibrary.wiley.com/terms-and-conditions) on Wiley Online Library for rules of use; OA articles are governed by the applicable Creative Commons License

TABLE 1 Descriptive statistics (mean ± standard deviation—SD) of the measured variables.

	Mean ± SD		
	Males	**Females**	**All together**
HSA (cm^2)	141.42 ± 11.90	119.92 ± 11.10	132.82 ± 15.63
C_{DA} (dimensionless)	0.56 ± 0.12	0.69 ± 0.15	0.61 ± 0.15
Thrust (N)	76.13 ± 11.47	62.84 ± 6.07	70.82 ± 11.61
SL (m)	1.93 ± 0.14	1.77 ± 0.09	1.86 ± 0.15
SF (Hz)	0.86 ± 0.08	0.81 ± 0.05	0.84 ± 0.07
Speed (m/s)	1.65 ± 0.06	1.44 ± 0.08	1.57 ± 0.13
100 m performance (s)	53.93 ± 1.68	60.12 ± 2.60	56.41 ± 3.71

Abbreviations: C_{DA}, active drag coefficient; HSA, hand surface area; SF, stroke frequency; SL, stroke length.

TABLE 2 Spearman correlation coefficient between all independent variables and the 100 m freestyle performance, and the variables linked in the theoretical modeling.

	r_s	p	Effect size
HSA—100 m performance	−0.527	0.007	Large
C_{DA}—100 m performance	0.419	0.037	Moderate
Thrust—100 m performance	−0.621	0.001	Large
SF—100 m performance	−0.536	0.006	Large
SL—100 m performance	−0.565	0.003	Large
Speed—100 m performance	−0.826	<0.001	Very large
HSA—thrust	0.456	0.022	Moderate
Thrust—SL	0.299	0.146	Small
Thrust—SF	0.639	0.001	Large
C_{DA}—SL	−0.544	0.005	Large
C_{DA}—speed	−0.395	0.050	Moderate
SL—speed	0.534	0.006	Large
SF—speed	0.689	<0.001	Large
Speed—100 m performance	−0.826	<0.001	Very large

Abbreviations: C_{DA}, active drag coefficient; HSA, hand surface area; SF, stroke frequency; SL, stroke length.

showed a non-significant correlation with a small effect size ($r_s = 0.299$, $p = 0.146$).

Figure 1B,C shows the confirmatory model before and after deleting the non-significant paths. The first run was based on the theoretical model. The corresponding standardized regression weight (beta value) is shown between the paths. This indicates the contribution of one variable to another. This first model showed that thrust was predicted by 23.6%, speed by 99.8%, and performance by 90.1%. All paths were significant ($p < 0.05$), except the thrust—SL. The goodness-of-fit of the model was $x^2/df = 2.780$ (reasonable adjustment) (Panel B). After deleting this non-significant path (thrust—SL) and recalculating the model, the goodness-of-fit improved to $x^2/df = 2.583$ and all paths were significant (Panel C). A one-unit (1 cm^2) increase in HSA results in a 0.486 N increase in the thrust. A one-unit (1 N) increase in thrust results in a 0.540 Hz increase in the SF. A one-unit (1 Hz) increase in SF results in a 0.759 m/s increase in speed. A one-unit (1 m) increase in SL results in a 0.662 m/s increase in speed. A one-unit increase (dimensionless) in C_{DA} results in a −0.492 m decrease in SL, and −0.513 m/s in speed. Finally, a one-unit (1 m/s) increase in speed results in a −0.950 s improvement in performance (i.e., faster speeds result in less time to cover the distance). Thrust was predicted by 23.6%, speed by 99.8%, and performance by 90.2%. Thus, the cascade of interactions based on this path-flow model provided a meaningful prediction of the 100 m performance.

4 | DISCUSSION

The purpose of this study was to understand the interactions between anthropometric, kinetic, and kinematic variables and how they determine the 100 m freestyle event in young swimmers. The main findings are that it was possible to develop such a deterministic model with reasonable goodness-of-fit, and that the 100 m freestyle performance was predicted by 90.2% considering a cascade of paths designed based on exploratory research in swimming. Overall, anthropometrics meaningfully determines kinetics, the latter meaningfully determines kinematics, and the latter meaningfully determines the 100 m freestyle performance.

In the present study, the swimmers' HSA was chosen as the anthropometric predictor of thrust, as the hand is considered the primary proxy for the force generated by the entire upper limb.[31] This presented a significant and positive effect in the swimmers' thrust, predicting it in 23.6%. Both experimental[32] and numerical methods[24] have reported that the HSA plays a key role in thrust production, with swimmers with larger HSAs more likely to produce greater thrust. In fact, it has been suggested that swimmers should change the position of their fingers during the arm-pull to increase thrust and ultimately swim speed.[24] Even experimental studies

16000838, 2024, 2, Downloaded from https://onlinelibrary.wiley.com/doi/10.1111/sms.14578 by Czech Technical University in Prague, Wiley Online Library on [02/03/2026]. See the Terms and Conditions (https://onlinelibrary.wiley.com/terms-and-conditions) on Wiley Online Library for rules of use; OA articles are governed by the applicable Creative Commons License

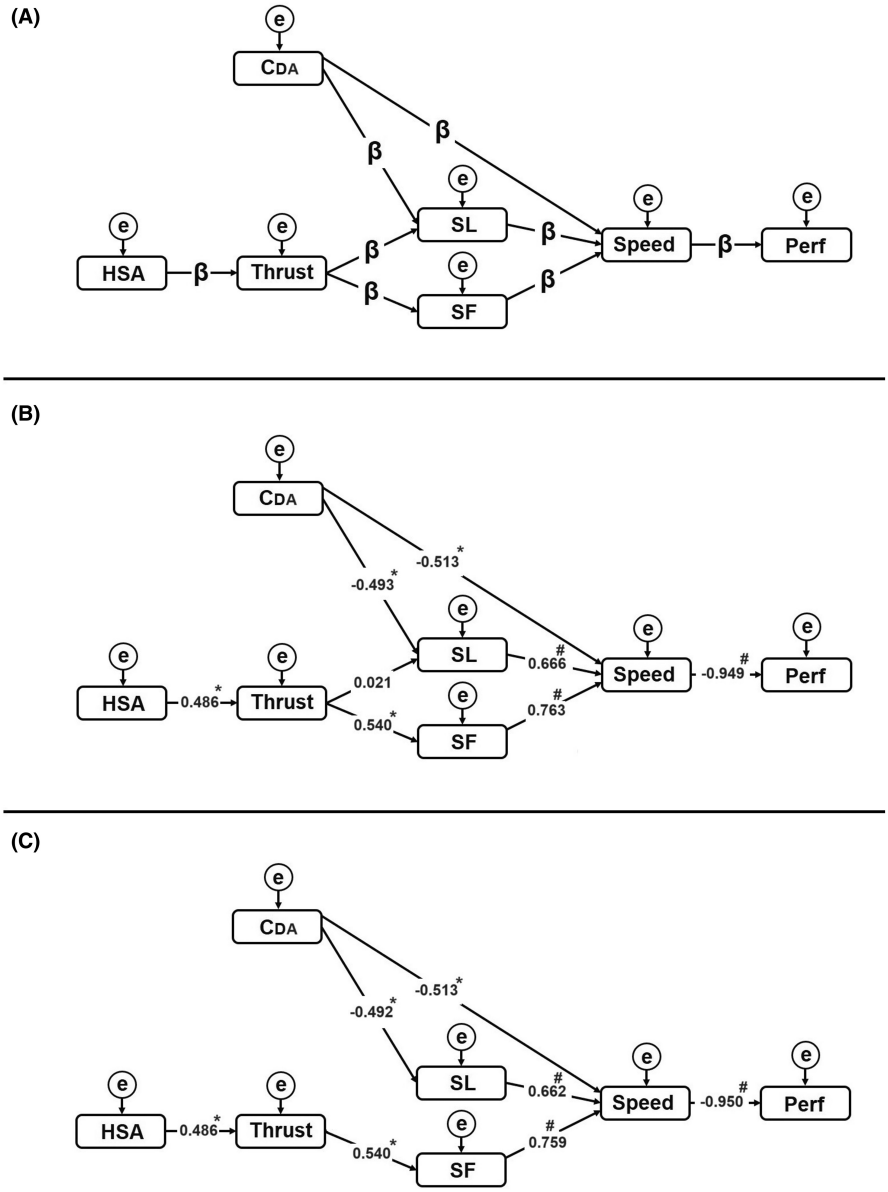

FIGURE 1 Theoretical (A) and confirmatory path-flow models calculated. (B) Refers to the initial calculation with all independent variables, and (C) after deleting non-significant paths. C_{DA}, active drag coefficient; e, disturbance term for a given variable; HSA, hand surface area; Perf, 100 m freestyle performance; SF, stroke frequency; SL, stroke length; $x_i \rightarrow y_i$, variable y_i depends on variable x_i; β, beta value for regression model between variables. *$p < 0.05$; #$p < 0.001$.

have found that increasing the HSA by using paddles results in greater thrust, which ultimately increases swim speed.[38,39] Therefore, youth swim coaches should be aware about these concepts and gradually introduce them into their swimmers' training sessions (depending on the swimmer's developmental level). It can also be argued that adding upper body strength and power variables to the model could increase the predictability of thrust, as greater upper body strength has been shown to lead to greater thrust.[32]

Deterministic models indicated that thrust (kinetics) determines the swimmers' kinematics (e.g., SF and SL).[17] Thus, in the theoretical model, and consequently in the first calculation, thrust was linked to SL and SF. For decades, it has been suggested that shorter SLs and slower SFs may be associated with a reduced ability to generate sufficient thrust necessary to overcome drag.[40] In fact, in youth swimming, coaches are advised to focus not only on increasing SF to improve swimming speed, but also on maximizing the SL.[41] Nevertheless, the thrust—SL pathway was not significant and so was deleted. This removal increased the goodness-of-fit of the model and the final model showed only significant paths. A study that aimed to classify and identify the performance of young swimmers through cluster analysis based on a set of determinants including thrust, SL, and SF, found that swimmers with the fastest swimming speeds had the fastest SFs, but not the greater thrust or larger SL.[42] In addition, Morais and co-workers[43] found that the fastest swimming speeds in young swimmers were not achieved with the fastest SFs nor the largest SLs. The fastest swimming speeds were achieved with an "optimal" combination of SF and SL. It appears that in maximal trials (such as sprint events), when swimmers reach a given maximum SF (based on a

16000838, 2024, 2, Downloaded from https://onlinelibrary.wiley.com/doi/10.1111/sms.14578 by Czech Technical University in Prague, Wiley Online Library on [02/03/2026]. See the Terms and Conditions (https://onlinelibrary.wiley.com/terms-and-conditions) on Wiley Online Library for rules of use; OA articles are governed by the applicable Creative Commons License

thrust increase), they are not able to increase their SL at the same time. In fact, the present model indicates that thrust has a positive and significant effect on SF but not on SL.

Swimming speed was 99.8% predicted. Being a cyclical and closed sport, the mean swimming speed depends on the frequency (SF) and the length (SL) of the stroke.[29] Of the two, SF had the greater and more positive effect on speed. In fact, it has been reported in the literature that better performing swimmers tend to increase their swimming speed by relying more on an increase in SF.[44] Nevertheless, and again, this increase in SF must be done while maintaining an optimal hand kinematics, so that swimmers can generate more thrust. Regarding the SL, and despite the presented SF, it has been claimed that swimmers must present a large SL in order to maintain or increase speed.[40] That is, even when swimmers increase their SF (with the goal of increasing their swimming speed), they should try to minimize a decrease in SL as much as possible. It should be noted that this reasoning applies to both adult/elite and young swimmers, but especially to the latter.[41] This reduction in SL could be due to the reduced duration of the stroke cycle resulting from an increase in SF. There is evidence that the fastest adult/elite swimmers use a superposition index of coordination that allows them to reduce the non-propulsive phase of the stroke cycle more and thus increase the swimming speed in the 100 m freestyle event.[45] In the case of younger counterparts, although a superposition mode was not demonstrated, it was reported that the fastest swimmers tended to reduce the non-propulsive phase of the stroke cycle more than their slower counterparts.[46] In addition, it was found that swimming speed, especially in adult/elite swimmers, increased with an increase in SF, but plateaued or decreased when SF exceeded a certain level.[15] Therefore, it can be argued that young sprinters should also control their swimming speed based on their SF once they have consolidated their stroke technique. That is, when they can execute the swim stroke without overspinning and with an effective power application on the water.[26]

The C_{DA} had a significant and negative effect on both speed and SL, that is greater C_{DA} resulted in slower speed and lower SL. The literature provides solid evidence for the influence of drag on swimming speed, with the fastest swimmers having lower values of C_{DA}.[42] The present modeling extends this rationale. However, it appears that C_{DA} also negatively affects SL, which is the distance that a swimmer travels per stroke cycle. As mentioned earlier, swimmers may present a shorter SL due to the shorter stroke cycle duration when they achieve an increase in SF. However, once again, young swimmers tend to have some time lag between the propulsive phases of the arm-pull.[46] Thus, during this phase of the stroke cycle, young swimmers may place themselves in a misaligned position, resulting in a large FSA and consequently poorer hydrodynamics.[35] Therefore, it can be argued that young swimmers should adopt/train their horizontal alignments during the stroke cycle to present a better hydrodynamic profile (i.e., less C_{DA}), and consequently faster swimming speeds. These horizontal misalignments can also occur when swimmers attempt to generate more thrust to increase SF. It has been noted that a strong core stability may be particularly beneficial for sprint swimmers by promoting efficient force transfer between the torso and the upper limbs.[47] Therefore, coaches of young swimmers should be aware of these factors as they may also influence the hydrodynamic profile of their swimmers.

Finally, the 100 m performance was predicted by 90.1%. This race event consists of the start, the clean swim, turn(s) (one or two depending on the length of the swimming pool, i.e., 25 or 50 m, respectively), and the finish.[48] Studies of swimming events have reported that in sprint races, swimmers spend most of the time performing the swim stroke itself (i.e., the clean swim phase—swim speed in the mid-section of the swimming pool without taking advantage of the start or turn push-off).[2] Thus, it is natural that the speed variable (measured as the swimmers pass through the mid-section of the swimming pool—"clean swim") strongly predicts the 100 m freestyle performance. Moreover, it has been reported that in this race event (in a 50 m of length swimming pool), the start and turn combined can account for approximately one-third of the total race time.[48] This may help to explain the remaining ~10% in the prediction of the 100 m freestyle performance. In addition, since the 100 m freestyle performance is considered an all-out event[49] and although this is a biomechanical model, it can also be argued that some physiological variables could help explain this event. It has been reported that the anaerobic contribution is the main energy source for maximal trials in adult swimmers lasting from 15 to 60 s.[50] However, even for 15 s trials, the aerobic system provided 15%–20% of the total energy requirement.[50] Therefore, it can be argued that this phenomenon may have a similar effect on maximal trials in young swimmers.

The main limitations are that: (i) this deterministic model is only suitable for the 100 m freestyle performance. Therefore, it would be interesting to test a similar model in the 50 m freestyle performance to understand if there are differences in the interactions between paths, since both events are sprinting events; (ii) the FSA was measured on land, simulating the five key moments of the front-crawl stroke cycle. There are techniques to measure FSA during swimming, but these are more complex and

16000838, 2024, 2, Downloaded from https://onlinelibrary.wiley.com/doi/10.1111/sms.14578 by Czech Technical University in Prague, Wiley Online Library on [02/03/2026]. See the Terms and Conditions (https://onlinelibrary.wiley.com/terms-and-conditions) on Wiley Online Library for rules of use; OA articles are governed by the applicable Creative Commons License

time-consuming[35]; (iii) more variables could be added to the model (which may require increasing the sample size). Although this is a biomechanical model, other studies could also include physiological variables (such as maximum oxygen uptake at the optimal stroke cadence or blood lactate concentration) to test an improvement in the deterministic model. Future studies of this type of modeling could also test similar (or different) interactions in other swim strokes and distances.

5 | CONCLUSION

It was possible to develop a deterministic model, based on biomechanical variables (anthropometrics, kinematics, and kinetics) that meaningful predicted the 100 m freestyle performance in young swimmers. This model suggests that the variables measured in the present study, although they may or may not have a significant and direct effect on the 100 m freestyle performance, may play an intermediate or mediating role. A cascade of pathways was observed in which: (i) anthropometrics meaningfully determined kinetics; (ii) kinetics meaningfully determined kinematics, and; (iii) kinematics meaningfully determined the 100 m freestyle performance. Coaches and swimmers should be aware that there are swim predictors that can first meaningfully interact with each other to ultimately predict performance (in this case, the 100 m freestyle performance).

5.1 | Perspective

To the best of our knowledge, this was the first attempt to model swimming performance including both thrust and drag variables simultaneously based on SEM. This confirmatory statistical analysis quantifies relationships among observed variables with the goal of providing a quantitative measure of a theoretical model hypothesized by the researchers. Path-flow analysis makes it possible to develop models based on multiple paths (links) with mediation or intermediate effects between variables. This biomechanical model of young swimmers shows that performance in the 100 m freestyle was predicted by 90.1%. Larger hands resulted in greater thrust, and the latter had a direct and significant effect on SF. This suggests that young swimmers should be advised to use their hands effectively to increase their HSA[24] in order to generate more thrust, which will promote fast SFs. Ultimately, this will increase the "clean" swimming speed and thus the performance of young swimmers in the 100 m freestyle. Also, a larger C_{DA} resulted in both slower swimming speed and smaller SL. The present findings provide coaches with some new insights and suggestions for practical applications regarding thrust and drag in the front-crawl stroke in young swimmers, specifically, about the interaction between thrust and SF and between C_{DA} and SL. Youth swim coaches should be aware of the importance of consolidating their swimmers' stroke mechanics from a biomechanical perspective, so that they can then focus more on the physiological demands.

ACKNOWLEDGEMENTS

This work is supported by national funds (FCT-Portuguese Foundation for Science and Technology) under the project UIDB/DTP/04045/2020.

DATA AVAILABILITY STATEMENT

The data that support the findings of this study are available on request from the corresponding author. The data are not publicly available due to privacy or ethical restrictions.

ORCID

Jorge E. Morais https://orcid.org/0000-0002-6885-0648

REFERENCES

1. Morais JE, Barbosa TM, Silva AJ, Veiga S, Marinho DA. Profiling of elite male junior 50 m freestyle sprinters: understanding the speed-time relationship. *Scand J Med Sci Sports*. 2022;32(1):60-68. doi:10.1111/sms.14058
2. Simbana-Escobar D, Hellard P, Seifert L. Modelling stroking parameters in competitive sprint swimming: understanding inter- and intra-lap variability to assess pacing management. *Hum Mov Sci*. 2018;61:219-230. doi:10.1016/j.humov.2018.08.002
3. Arellano R, Ruiz-Navarro JJ, Barbosa TM, et al. Are the 50 m race segments changed from heats to finals at the 2021 European swimming championships? *Front Physiol*. 2022;13:797367. https://doi.org/10.3389/fphys.2022.797367
4. Stallman RK. Which stroke first? No stroke first! *Int J Aquat Res Educ*. 2014;8(1):2.
5. Carvalho DD, Monteiro AS, Fonseca P, et al. Swimming sprint performance depends on upper/lower limbs strength and swimmers level. *J Sports Sci*. 2023;41(8):747-757. doi:10.1080/02640414.2023.2239610
6. Figueiredo P, Silva A, Sampaio A, Vilas-Boas JP, Fernandes RJ. Front crawl sprint performance: a cluster analysis of biomechanics, energetics, coordinative, and anthropometric determinants in young swimmers. *Mot Control*. 2016;20(3):209-221. doi:10.1123/mc.2014-0050
7. Zacca R, Azevedo R, Chainok P, et al. Monitoring age-group swimmers over a training macrocycle: energetics, technique, and anthropometrics. *J Strength Cond Res*. 2018;34:818-827. doi:10.1519/jsc.0000000000002762
8. Morais JE, Silva AJ, Garrido ND, Marinho DA, Barbosa TM. The transfer of strength and power into the stroke biomechanics of young swimmers over a 34-week period. *Eur J Sport Sci*. 2018;18(6):787-795. doi:10.1080/17461391.2018.1453869

16000838, 2024, 2, Downloaded from https://onlinelibrary.wiley.com/doi/10.1111/sms.14578 by Czech Technical University in Prague, Wiley Online Library on [02/03/2026]. See the Terms and Conditions (https://onlinelibrary.wiley.com/terms-and-conditions) on Wiley Online Library for rules of use; OA articles are governed by the applicable Creative Commons License

9. Nevill AM, Oxford SW, Duncan MJ. Optimal body size and limb length ratios associated with 100-m personal-best swim speeds. *Med Sci Sports Exerc*. 2015;47(8):1714-1718. doi:10.1249/mss.0000000000000586
10. Barbosa TM, Bragada JA, Reis VM, Marinho DA, Carvalho C, Silva AJ. Energetics and biomechanics as determining factors of swimming performance: updating the state of the art. *J Sci Med Sport*. 2010;13(2):262-269. doi:10.1016/j.jsams.2009.01.003
11. Lopes TJ, Morais JE, Pinto MP, Marinho DA. Numerical and experimental methods used to evaluate active drag in swimming: a systematic narrative review. *Front Physiol*. 2022;13:938658. https://doi.org/10.3389/fphys.2022.938658
12. Koga D, Tsunokawa T, Sengoku Y, Homoto K, Nakazono Y, Takagi H. Relationship between hand kinematics, hand hydrodynamic pressure distribution and hand propulsive force in sprint front crawl swimming. *Front Sports Act Living*. 2022;4:786459. doi:10.3389/fspor.2022.786459
13. Neiva HP, Fernandes RJ, Cardoso R, Marinho DA, Abraldes JA. Monitoring master swimmers' performance and active drag evolution along a training mesocycle. *Int J Environ Res Public Health*. 2021;18(7):3569. doi:10.3390/ijerph18073569
14. Santos M, Henrique R, Costa M, et al. The influence of anthropometric variables, body composition, propulsive force and maturation on 50 m freestyle swimming performance in junior swimmers: an allometric approach. *J Sports Sci*. 2021;39:1-6. doi: 10.1080/02640414.2021.1891685
15. Takagi H, Nakashima M, Sengoku Y, et al. How do swimmers control their front crawl swimming velocity? Current knowledge and gaps from hydrodynamic perspectives. *Sports Biomech*. 2021;22:1552-1571. doi:10.1080/14763141.2021.1959946
16. Chow JW, Knudson DV. Use of deterministic models in sports and exercise biomechanics research. *Sports Biomech*. 2011;10(3):219-233. doi:10.1080/14763141.2011.592212
17. Barbosa T, Costa M, Marinho D. Proposal of a deterministic model to explain swimming performance. *Int J Swim Kinet*. 2013;2(1):1-54.
18. Oliveira M, Henrique RS, Queiroz DR, Salvina M, Melo WV, Moura dos Santos MA. Anthropometric variables, propulsive force and biological maturation: a mediation analysis in young swimmers. *Eur J Sport Sci*. 2021;21(4):507-514.
19. Mayr S, Erdfelder E, Buchner A, Faul F. A short tutorial of GPower. *Tutor Quant Methods Psychol*. 2007;3(2):51-59.
20. Jürimäe J, Haljaste K, Cicchella A, et al. Analysis of swimming performance from physical, physiological, and biomechanical parameters in young swimmers. *Pediatr Exerc Sci*. 2007;19(1):70-81. doi: 10.1123/pes.19.1.70.
21. McKay A, Stellingwerff T, Smith E, et al. Defining training and performance caliber: a participant classification framework. *Int J Sports Physiol Perform*. 2021;17:1-15. doi:10.1123/ijspp.2021-0451
22. Barbosa TM, Barbosa AC, Simbaña Escobar D, et al. The role of the biomechanics analyst in swimming training and competition analysis. *Sports Biomech*. 2021;22:1-18. doi:10.1080/14763141.2021.1960417
23. Morais JE, Barbosa TM, Garrido ND, et al. Agreement between different methods to measure the active drag coefficient in front-crawl swimming. *J Hum Kinet*. 2023;86:41–49. doi: 10.5114/jhk/159605.
24. Bilinauskaite M, Mantha V, Rouboa A, Ziliukas P, Silva AJ. Computational fluid dynamic study of swimmer's hand velocity, orientation and shape: contributions to hydrodynamics. *J Biomed Biotechnol*. 2013;2013:140487. doi:10.1155/2013/140487
25. Koga D, Gonjo T, Kawai E, et al. Effects of exceeding stroke frequency of maximal effort on hand kinematics and hand propulsive force in front crawl. *Sports Biomech*. 2020;23:1-13. doi:10.1080/14763141.2020.1814852
26. Soh J, Sanders R. The clues are in the flow: how swim propulsion should be interpreted. *Sports Biomech*. 2019;20:1-17. doi:10.1080/14763141.2019.1602162
27. Neiva HP, Marques MC, Barbosa TM, et al. The effects of different warm-up volumes on the 100-m swimming performance: a randomized crossover study. *J Strength Cond Res*. 2015;29(11):3026-3036. doi:10.1519/jsc.0000000000001141
28. McCabe CB, Sanders RH, Psycharakis SG. Upper limb kinematic differences between breathing and non-breathing conditions in front crawl sprint swimming. *J Biomech*. 2015;48(15):3995-4001.
29. Craig AB, Pendergast DR. Relationships of stroke rate, distance per stroke, and velocity in competitive swimming. *Med Sci Sports*. 1979;11(3):278-283.
30. Morais J, Barbosa TM, Lopes VP, Marques MC, Marinho DA. Propulsive force of upper limbs and its relationship to swim velocity in the butterfly stroke. *Int J Sports Med*. 2021;42(12):1105-1112. doi:10.1055/a-1386-4985
31. Gourgoulis V, Aggeloussis N, Mavridis G, et al. Acute effect of front crawl Sprint resisted swimming on the propulsive forces of the hand. *J Appl Biomech*. 2013;29:98-104. doi:10.1123/jab.29.1.98
32. Morais JE, Marques MC, Rodríguez-Rosell D, Barbosa TM, Marinho DA. Relationship between thrust, anthropometrics, and dry-land strength in a national junior swimming team. *Phys Sportsmed*. 2020;48(3):304-311. doi:10.1080/00913847.2019.1693240
33. Kolmogorov SV, Duplishcheva OA. Active drag, useful mechanical power output and hydrodynamic force coefficient in different swimming strokes at maximal velocity. *J Biomech*. 1992;25(3):311-318.
34. Kolmogorov S. Development of the technology to measure active drag of swimmers by the method of small perturbations. *J Biomech*. 2023;149:111486. doi:10.1016/j.jbiomech.2023.111486
35. Morais JE, Sanders RH, Papic C, et al. The influence of the frontal surface area and swim velocity variation in front crawl active drag. *Med Sci Sports Exerc*. 2020;52(11):2357-2364. doi:10.1249/MSS.0000000000002400
36. Hopkins W. A scale of magnitudes for effect statistics. A new view of statistics. 2002. Accessed October 10, 2013 http://SportsciOrg/Resource/Stats/Effectmag.html 2019
37. Wheaton B. Assessment of fit in overidentified models with latent variables. *Sociol Methods Res*. 1987;16(1):118-154.
38. Barbosa AC, Ferreira TH, Leis LV, et al. Does a 4-week training period with hand paddles affect front-crawl swimming performance? *J Sports Sci*. 2020;38(5):511-517.
39. Gourgoulis V, Aggeloussis N, Vezos N, Kasimatis P, Antoniou P, Mavromatis G. Estimation of hand forces and propelling efficiency during front crawl swimming with hand paddles. *J Biomech*. 2008;41(1):208-215.
40. Craig AB, Skehan PL, Pawelczyk JA, et al. Velocity, stroke rate, and distance per stroke during elite swimming competition. *Med Sci Sports Exerc*. 1985;17(6):625-634.

16000838, 2024, 2, Downloaded from https://onlinelibrary.wiley.com/doi/10.1111/sms.14578 by Czech Technical University in Prague, Wiley Online Library on [02/03/2026]. See the Terms and Conditions (https://onlinelibrary.wiley.com/terms-and-conditions) on Wiley Online Library for rules of use; OA articles are governed by the applicable Creative Commons License

41. Morais JE, Silva AJ, Marinho DA, Lopes VP, Barbosa TM. Determinant factors of long-term performance development in young swimmers. *Int J Sports Physiol Perform*. 2017;12(2):198-205. doi:10.1123/ijspp.2015-0420
42. Morais JE, Barbosa TM, Neiva HP, Marques MC, Marinho DA. Young swimmers' classification based on performance and biomechanical determinants: determining similarities through cluster analysis. *Mot Control*. 2022;26(3):396-411. doi:10.1123/mc.2021-0126
43. Morais JE, Barbosa TM, Nevill AM, Cobley S, Marinho DA. Understanding the role of propulsion in the prediction of front-crawl swimming velocity and in the relationship between stroke frequency and stroke length. *Front Physiol*. 2022;13:13. doi:10.3389/fphys.2022.876838
44. Seifert L, Carmigniani R. Coordination and stroking parameters in the four swimming techniques: a narrative review. *Sports Biomech*. 2021;22:1-17.
45. Seifert L, Chollet D, Chatard JC. Kinematic changes during a 100-m front crawl: effects of performance level and gender. *Med Sci Sports Exerc*. 2007;39(10):1784-1793.
46. Silva AF, Figueiredo P, Morais S, Vilas-Boas JP, Fernandes RJ, Seifert L. Task constraints and coordination flexibility in young swimmers. *Mot Control*. 2019;23:1-18. doi:10.1123/mc.2018-0070
47. Weston M, Hibbs A, Thompson K, et al. Isolated core training improves sprint performance in national-level junior swimmers. *Int J Sports Physiol Perform*. 2014;10:204-210.
48. Morais JE, Marinho DA, Arellano R, Barbosa TM. Start and turn performances of elite sprinters at the 2016 European Championships in swimming. *Sports Biomech*. 2019;18(1):100-114. doi:10.1080/14763141.2018.1435713
49. McGibbon KE, Pyne DB, Shephard ME, et al. Pacing in swimming: a systematic review. *Sports Med*. 2018;48(7):1621-1633. doi:10.1007/s40279-018-0901-9
50. Ogita F, Onodera T, Tamaki H, et al. Metabolic profile during exhaustive arm stroke, leg kick and whole body swimming lasting 15 s to 10 min. In: Chatard JC (ed.). *Biomechanics and Medicine in Swimming IX*; 2003:361-366.

How to cite this article: Morais JE, Barbosa TM, Gomeñuka NA, Marinho DA. Effects of anthropometrics, thrust, and drag on stroke kinematics and 100 m performance of young swimmers using path-analysis modeling. *Scand J Med Sci Sports*. 2024;34:e14578. doi:10.1111/sms.14578

16000838, 2024, 2, Downloaded from https://onlinelibrary.wiley.com/doi/10.1111/sms.14578 by Czech Technical University in Prague, Wiley Online Library on [02/03/2026]. See the Terms and Conditions (https://onlinelibrary.wiley.com/terms-and-conditions) on Wiley Online Library for rules of use; OA articles are governed by the applicable Creative Commons License